14' X 28' RECTANGLE 6" RADIUS - WEDGE

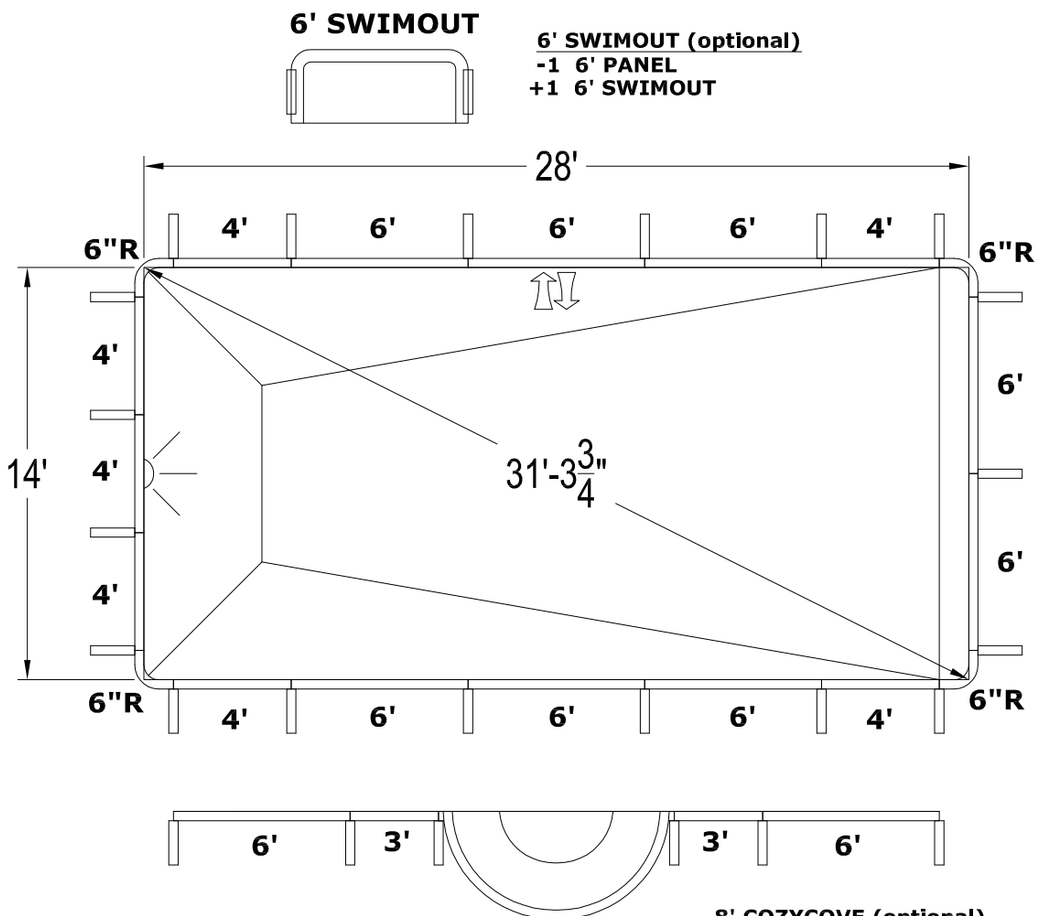

6' SWIMOUT (optional)
-1 6' PANEL
+1 6' SWIMOUT

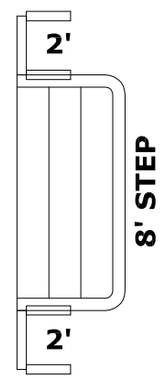

8' STEP (optional)
-2 6' PANEL
+2 2' PANEL
+1 BRACE
+1 8' STEP

8' COZYCOVE (optional)
-1 6' PANEL
-2 4' PANELS
+2 3' PANELS
+1 8' COZY COVE

DIMENSIONS

A	14'	K	-
B	28'	L	23'
D	3'4"	M	1'
E	2'8"	M2	-
F	6'	T	-
G	6'	S	-
H	4'	N	-
I	4'	P	-
J	4'	U	-

-	-	SQ. FOOTAGE	392
PERIMETER	83'2"	GALLONS	12593

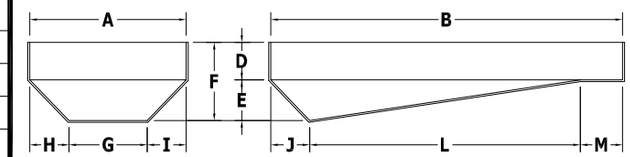

BILL OF MATERIALS

QTY	PART	DESCRIPTION
7	HP206	6' PANEL
1	HP206A	6' PANEL (A/G)
6	HP204	4' PANEL
1	HP204L	4' PANEL (LIGHT)
4	HP256	6"R PANEL
19	HP199	BRACE

OVERDIG DETAIL

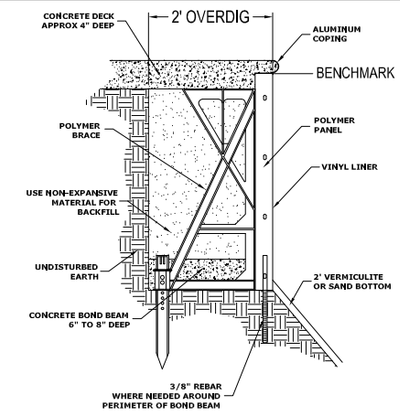

*NOTE: REFER TO INSTALLATION MANUAL FOR MORE INFO.

COPING LAYOUT

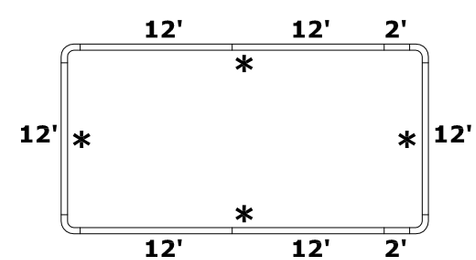

NO DIVING WARNING

ATTENTION DEALER/BUILDER:
It is your responsibility to ensure the safety package provided is delivered to the pool owner and that the "NO DIVING" labels are properly installed.

'NO DIVING' WARNING LABELS MUST BE INSTALLED IN NO DIVING AREAS ACCORDING TO NSPI SPECIFICATIONS

* SUGGESTED LABEL LOCATIONS ARE SPECIFIED IN THE COPING LAYOUT

PRE-CUT PANEL LEGEND

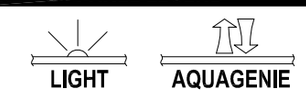

GENERAL NOTES

1. These are finished dimensions ready for the liner.
2. Dimensions are from inside pool panels.
3. The ideal water level should be to the middle of the skimmer opening(s).

EXCAVATION NOTES

1. Rough excavation should be 2" deeper in each instance.
2. Soil to have minimum bearing capacity of 2000 P.S.F.
3. Locate top of pool at least 6" above surrounding land elevation.
4. See 'Over Dig Detail' for excavation around pool.
5. Fill voids under base of panels and tamp well.
6. Backfill with non-expansive material.

ADDITIONAL NOTES

THIS DOCUMENT IS FOR ILLUSTRATIVE PURPOSES ONLY.
The dealer or contractor who sells or installs your pool is an independant contractor and is not an agent of the Manufacturer. The construction methods illustrated here are suggestions and apply only to normal ground conditions. There may be additional precautions and/or methods of construction. Proper installation is the responsibility of the dealer/builder/contractor.

HYDRA POOLS
543 South Main Street - Sweetwater, TN 37874

DATE	PANEL LINE	DRAWING TITLE	DRAWING NUMBER
JAN 2012	CORNERSTONE	14' X 28' RECTANGLE 6" RADIUS - WEDGE	20111-PWH

Document ID: HF5100, Hydra Standard Panel Layout Drawing
Rev Date: 12/6/2005
Rev Level: A

Copyright © 2012 by Hydra Pools