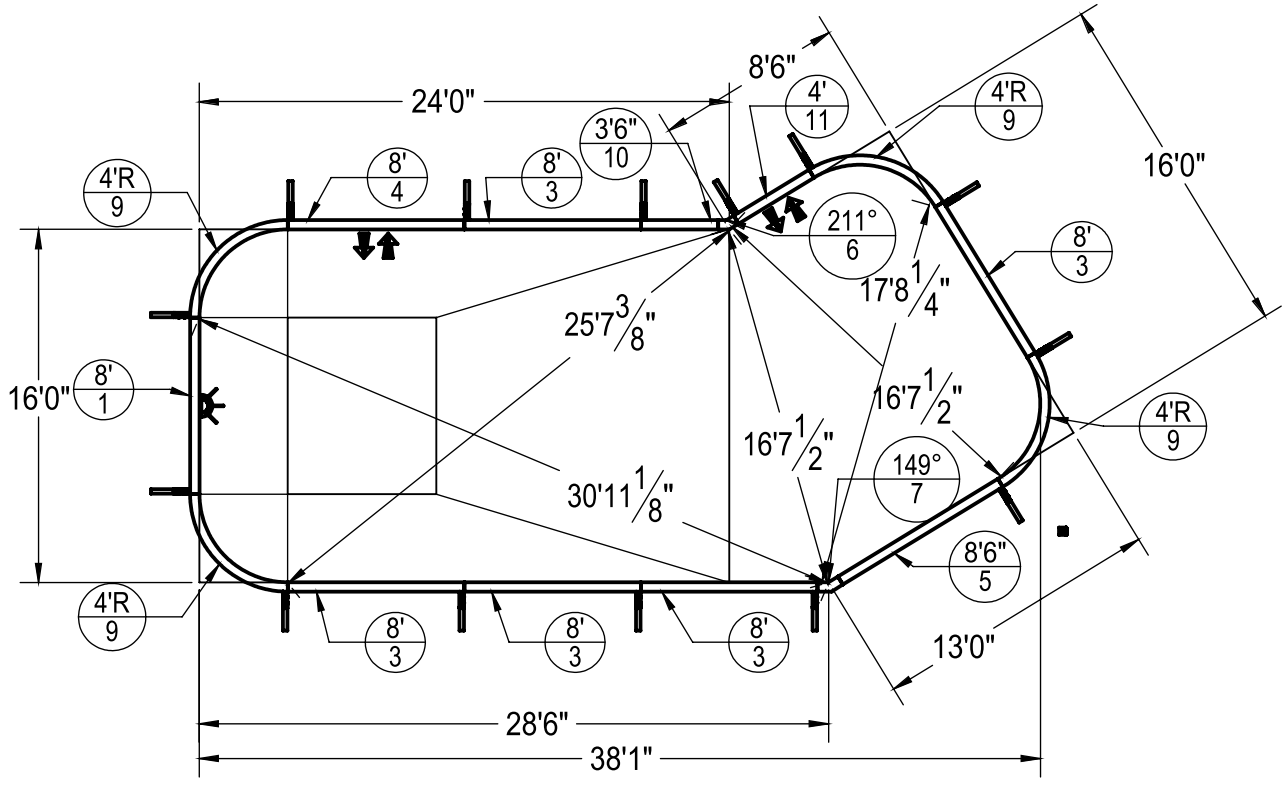

ITEM NO.	PART NUMBER	DESCRIPTION	QTY.
1	HPSD108L	8' LIGHT PANEL	1
2	HPSFOB	STEEL BRACE	14
3	HPSD108P	8' PLAIN PANEL	5
4	HPSD108AG	8' AG PANEL	1
5	HPSD1086P	8'6" PLAIN PANEL	1
6	HPSD6X6211	6"X6" 211° ELL PANEL	1
7	HPSD6X6149	6"X6" 149° ELL PANEL	1
8	HPS1916	BOLT PACK 50 PCS	5
9	HPSD4R	4'R PANEL	4
10	HPSD1036P	3'6" PLAIN PANEL	1

NOTES:

1. THESE ARE FINISHED DIMENSIONS READY FOR THE LINER.
2. DIMENSIONS ARE FROM INSIDE POOL PANELS.
3. THE IDEAL WATER LEVER SHOULD BE TO THE MIDDLE OF THE SKIMMER OPENING(S).

EXCAVATION NOTES:

4. ROUGH EXCAVATION SHOULD BE 2" DEEPER IN EACH INSTANCE
5. SOIL TO HAVE MINIMUM BEARING CAPACITY OF 2000 PSF.
6. LOCATE TOP OF POOL AT LEAST 6" ABOVE THE SURROUNDING LAND ELEVATION
7. SEE "OVER DIG DETAIL" FOR EXCAVATION AROUND POOL.
8. FILL VOIDS UNDER BASE OF PANELS AND TAMP WELL.
9. BACK FILL WITH NON-EXPANSIVE MATERIAL

IMPORTANT NOTES:

THIS DOCUMENT IS FOR ILLUSTRATIVE PURPOSES ONLY. THE DEALER OR CONTRACTOR WHO SELLS OR INSTALLS YOUR POOL IS AN INDEPENDENT CONTRACTOR AND IS NOT AN AGENT OF THE MANUFACTURER. THE CONSTRUCTION METHODS ILLUSTRATED HERE ARE SUGGESTIONS AND APPLY ONLY TO NORMAL GROUND CONDITIONS. THERE MAY BE ADDITIONAL PRECAUTIONS AND/OR METHODS OF CONSTRUCTION. PROPER INSTALLATION IS THE RESPONSIBILITY OF THE DEALER/BUILDER/CONTRACTOR.

ENGINEERING DRAWING NUMBER: 00001007

WEIGHT: 86.515 lbs
VOLUME: 2394.720 Inch³
COLOR: NA
HEAT TREAT: NA
FINISH: NA
TEXTURE: NA

UNLESS OTHERWISE SPECIFIED
DIMENSIONS ARE IN INCHES
TOLERANCES
DECIMALS: X ± 0.1
XX ± 0.01
XXX ± 0.005
XXXX ± 0.0005
ANGULAR: X ± 0.5
THIRD ANGLE PROJECTION

DESIGNED BY: RCOLBOCH
DETAILED BY: Rcolboch
LAST REVISED BY: rcolboch
MATERIAL: Material <not specified>

PoolWarehouse
...we know swimming pools

TITLE: 16' X 38'1" LAZY ELL RIGHT 4'R

PART NUMBER: 60468
SCALE: 1:96
SHEET: 1 OF 1
SIZE: B

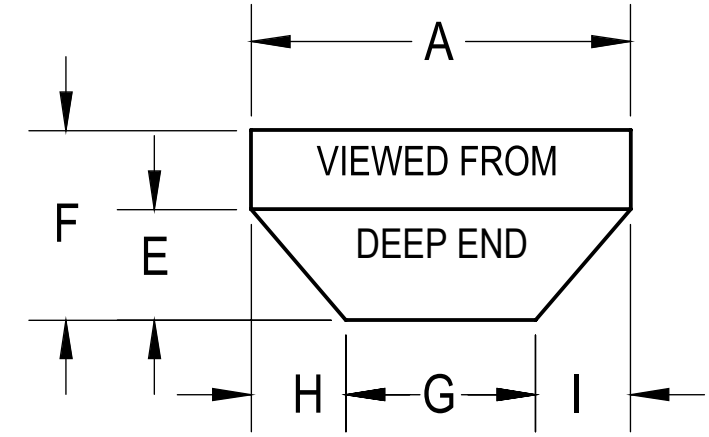

A	16'	K	6'0"
B	28'6"	L	14'0"
D	3'4"	M	VAR
E	4'-8"	M2	
F	8'0"	T	16'
G	8'0"	S	13'0"
H	4'0"	N	24'0"
I	4'0"	P	8'6"
J	4'0"	U	

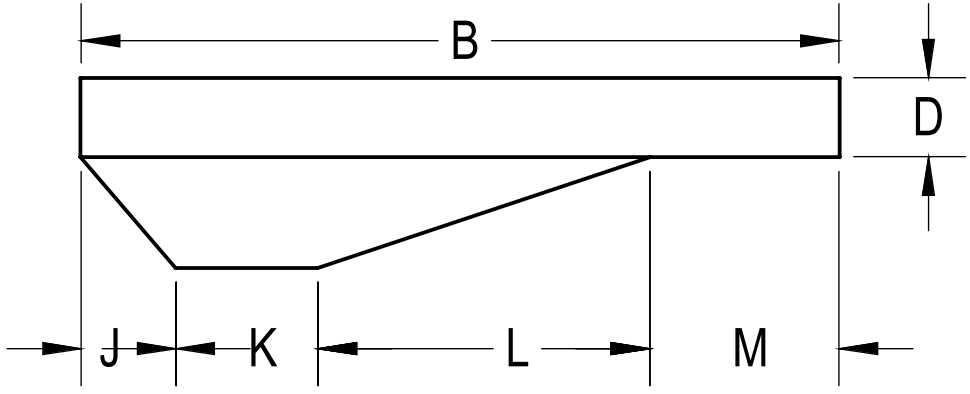

OVERDIG DETAIL

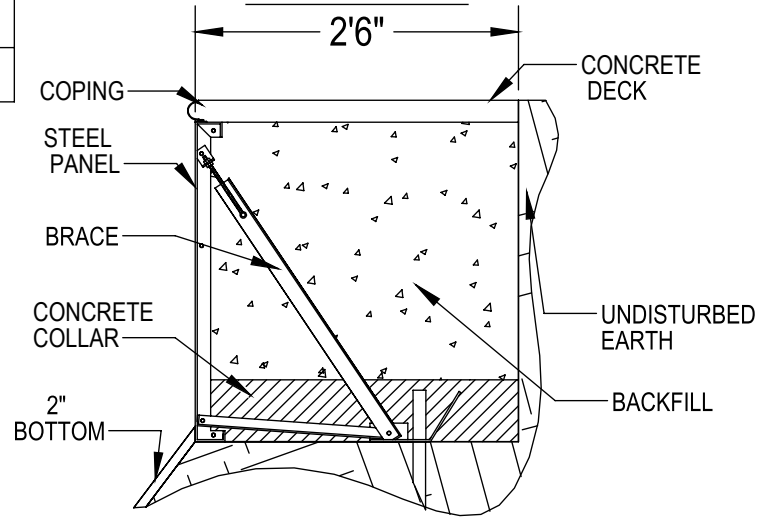

NOTES:

1. THESE ARE FINISHED DIMENSIONS READY FOR THE LINER.
2. DIMENSIONS ARE FROM INSIDE POOL PANELS.
3. THE IDEAL WATER LEVER SHOULD BE TO THE MIDDLE OF THE SKIMMER OPENING(S).

EXCAVATION NOTES:

4. ROUGH EXCAVATION SHOULD BE 2" DEEPER IN EACH INSTANCE
5. SOIL TO HAVE MINIMUM BEARING CAPACITY OF 2000 PSF.
6. LOCATE TOP OF POOL AT LEAST 6" ABOVE THE SURROUNDING LAND ELEVATION
7. SEE "OVER DIG DETAIL" FOR EXCAVATION AROUND POOL.
8. FILL VOIDS UNDER BASE OF PANELS AND TAMP WELL.
9. BACK FILL WITH NON-EXPANSIVE MATERIAL

IMPORTANT NOTES:

THIS DOCUMENT IS FOR ILLUSTRATIVE PURPOSES ONLY. THE DEALER OR CONTRACTOR WHO SELLS OR INSTALLS YOUR POOL IS AN INDEPENDENT CONTRACTOR AND IS NOT AN AGENT OF THE MANUFACTURER. THE CONSTRUCTION METHODS ILLUSTRATED HERE ARE SUGGESTIONS AND APPLY ONLY TO NORMAL GROUND CONDITIONS. THERE MAY BE ADDITIONAL PRECAUTIONS AND/OR METHODS OF CONSTRUCTION. PROPER INSTALLATION IS THE RESPONSIBILITY OF THE DEALER/BUILDER/CONTRACTOR.

SQ FOOT 592
PERIMETER 99' 2"
GALLONS 21680

PANEL LEGEND

NO DIVING WARNING:
ATTENTION DEALER/BUILDER:
It is your responsibility to ensure the safety package provided is delivered to the pool wonder and that the "NO DIVING" labels are properly installed.

"NO DIVING" WARNING LABELS MUST BE INSTALLED IN NO DIVING AREAS ACCORDING TO ANSI SPECIFICATIONS

ENGINEERING DRAWING NUMBER: 00001007

WEIGHT: 86.515 lbs
VOLUME: 2394.720 Inch³
COLOR: NA
HEAT TREAT: NA
FINISH: NA
TEXTURE: NA

UNLESS OTHERWISE SPECIFIED
DIMENSIONS ARE IN INCHES
TOLERANCES
DECIMALS: X ± 0.1
XX ± 0.01
XXX ± 0.005
XXXX ± 0.0005
ANGULAR: X ± 0.5
THIRD ANGLE PROJECTION

DESIGNED BY: RCOLBOCH
DETAILED BY: Rcolboch
LAST REVISED BY: rcolboch
MATERIAL: Material <not specified>

PoolWarehouse
...we know swimming pools

TITLE: 16' X 38'1" LAZY ELL RIGHT 4'R

PART NUMBER: 60468
SCALE: 1:96
SHEET: 1 OF 1
SIZE: B *