REVISION HISTORY				
REV.	DESCRIPTION	DATE	ECO	BY

MIRROR NUMBER:

MADE FROM: 00016618

CHECK IN DATETIME: Monday, October 23, 2017 9:57:15 AM

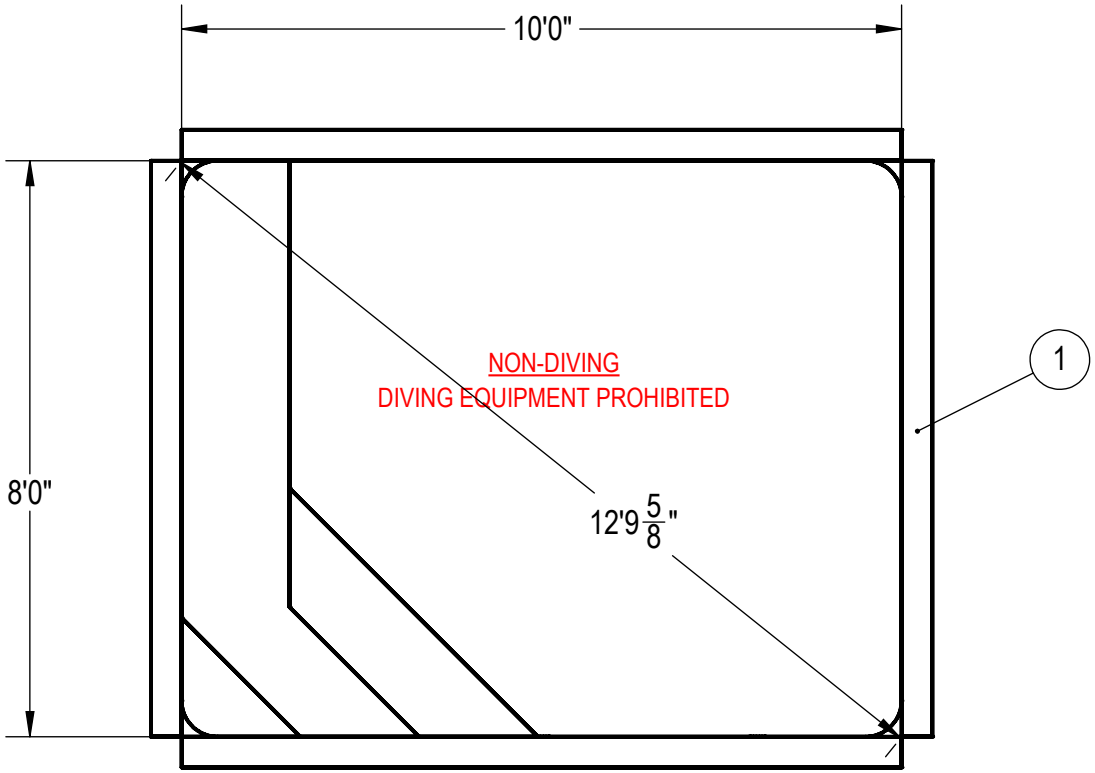

NOTES:

1. THESE ARE FINISHED DIMENSIONS READY FOR THE LINER.
2. DIMENSIONS ARE FROM INSIDE POOL PANELS.
3. ROPE AND FLOAT ASSEMBLY SHOULD BE INSTALLED IN ACCORDANCE WITH CURRENT ANSI/ASPS/ICC REGULATIONS
4. HYDRA LINER TRACK FOR STEPS IS INSTALLED WITH THE BARB FACING THE RISER WALL ON THE STEP.

EXCAVATION NOTES:

5. ROUGH EXCAVATION SHOULD BE 2" DEEPER IN EACH INSTANCE.
6. SOIL TO HAVE MINIMUM BEARING CAPACITY OF 1500 PSF.
7. LOCATE TOP OF POOL AT LEAST 6" ABOVE THE SURROUNDING LAND ELEVATION.
8. SEE "OVER DIG DETAIL" FOR EXCAVATION AROUND POOL.
9. FILL VOIDS UNDER BASE OF PANELS AND TAMP WELL.
10. BACK FILL WITH NON-EXPANSIVE MATERIAL.
11. FOLLOW ALL CURRENT ANSI / APSP / ICC GUIDELINES FOR RESIDENTIAL POOLS

IMPORTANT NOTES:

THIS DOCUMENT IS FOR ILLUSTRATIVE PURPOSES ONLY. THE DEALER OR CONTRACTOR WHO SELLS OR INSTALLS YOUR POOL IS AN INDEPENDENT CONTRACTOR AND IS NOT AN AGENT OF THE MANUFACTURER. THE CONSTRUCTION METHODS ILLUSTRATED HERE ARE SUGGESTIONS AND APPLY ONLY TO NORMAL GROUND CONDITIONS. THERE MAY BE ADDITIONAL PRECAUTIONS AND/OR METHODS OF CONSTRUCTION. PROPER INSTALLATION IS THE RESPONSIBILITY OF THE DEALER/BUILDER/CONTRACTOR.

ITEM	FILE NAME	DESCRIPTION	CUSTOMER DRAWING #	VENDOR PART #	QTY.	VENDOR NAME	MATERIAL
1	Q00000562	ASSEMBLY, 3-TREAD STEP, BENCH, 8' SQUARE, 5 INLETS, 3 LED, 1084, PLUNGE POOL, LINER TRACK	Q00000562	Q00000562	1	SAMSON STEEL	Water

ENGINEERING DRAWING NUMBER: 00016619

WEIGHT: lbs
VOLUME: Inch³
COLOR: NA
HEAT TREAT: NA
FINISH: NA
TEXTURE: NA

UNLESS OTHERWISE SPECIFIED
DIMENSIONS ARE IN INCHES
TOLERANCES
DECIMALS: X ± .1
XX ± .01
XXX ± .001
XXXX ± .0005
ANGULAR: X ± 0.5
THIRD ANGLE PROJECTION

DESIGNED BY: BUMPHREY — CREATION DATE: 7/24/2017
DETAILED BY: BUMPHREY — DETAILED DATE: 10/23/2017
LAST REVISED BY: bumphrey — LAST REVISED DATE: 10/23/2017
MATERIAL:

PoolWarehouse
we know swimming pools

TITLE: LAYOUT, 8' X 10', RECTANGLE, 6" RADIUS, 3'-4" DEEP, FLAT BOTTOM, Q00000562, 600 SERIES

PART NUMBER: 00016619
SCALE: 1:32
SHEET: 1 OF 3
SIZE: A

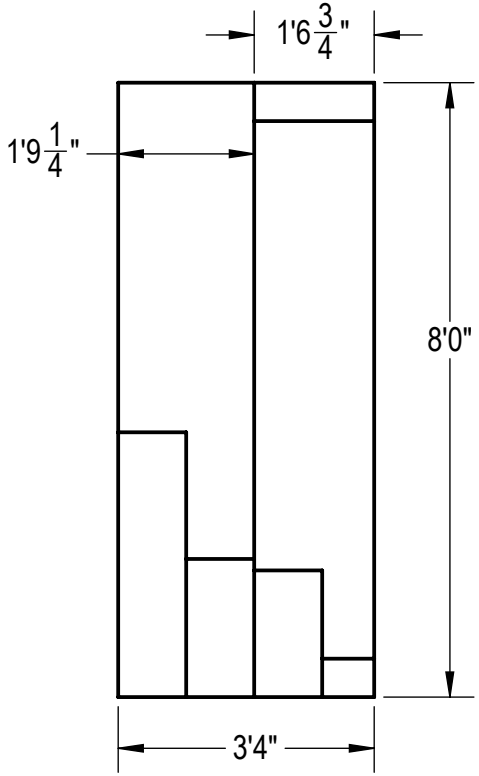

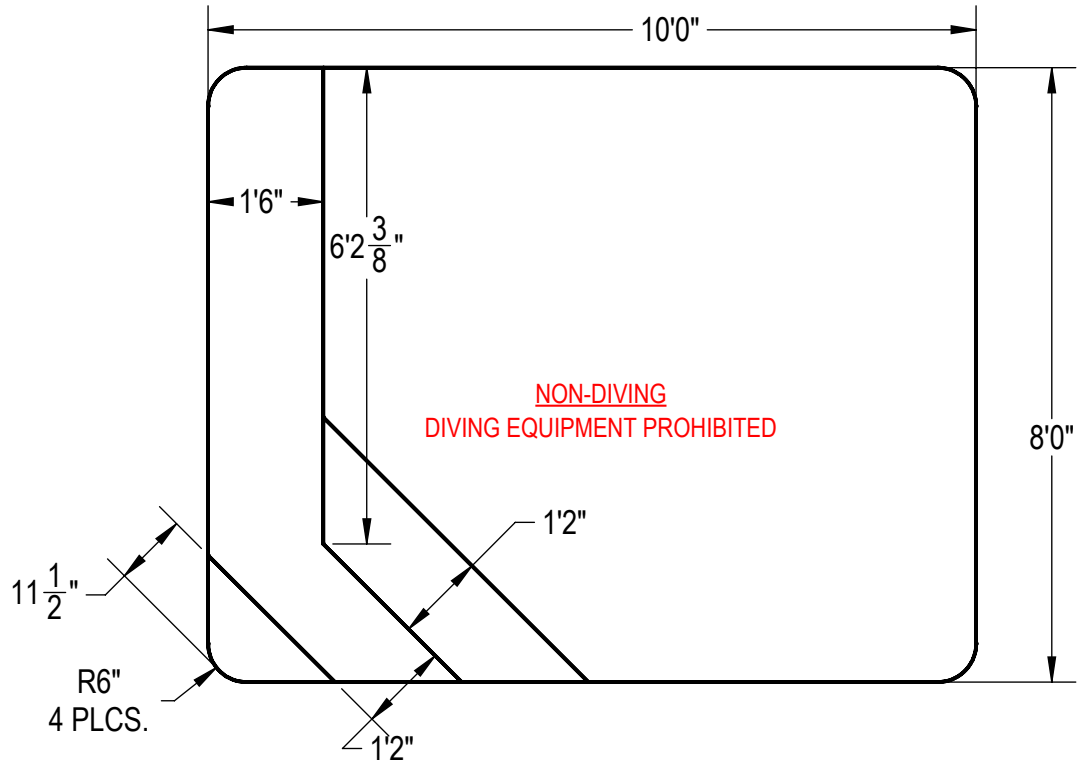

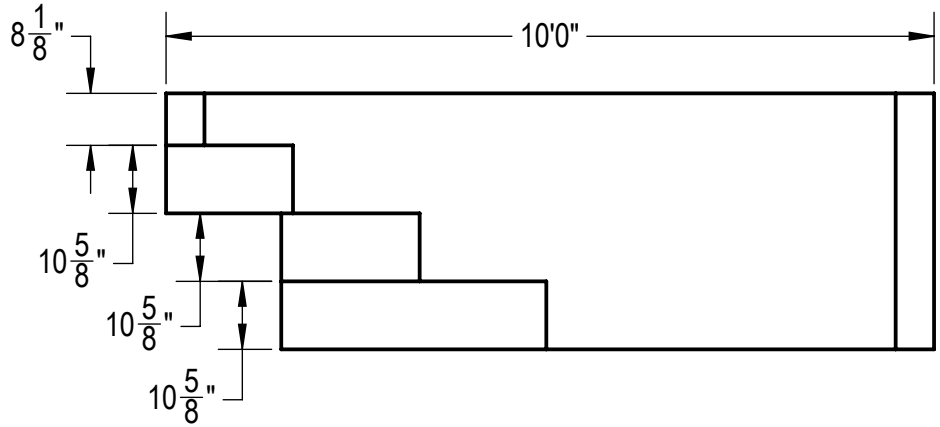

Area: 79.79ft ^2
Perimeter: 35.14ft
Volume = 1773 US gallons

NOTES:

1. THESE ARE FINISHED DIMENSIONS READY FOR THE LINER.
2. DIMENSIONS ARE FROM INSIDE POOL PANELS.
3. ROPE AND FLOAT ASSEMBLY SHOULD BE INSTALLED IN ACCORDANCE WITH CURRENT ANSI/ASPS/ICC REGULATIONS
4. HYDRA LINER TRACK FOR STEPS IS INSTALLED WITH THE BARB FACING THE RISER WALL ON THE STEP.

EXCAVATION NOTES:

5. ROUGH EXCAVATION SHOULD BE 2" DEEPER IN EACH INSTANCE.
6. SOIL TO HAVE MINIMUM BEARING CAPACITY OF 1500 PSF.
7. LOCATE TOP OF POOL AT LEAST 6" ABOVE THE SURROUNDING LAND ELEVATION.
8. SEE "OVER DIG DETAIL" FOR EXCAVATION AROUND POOL.
9. FILL VOIDS UNDER BASE OF PANELS AND TAMP WELL.
10. BACK FILL WITH NON-EXPANSIVE MATERIAL.
11. FOLLOW ALL CURRENT ANSI / APSP / ICC GUIDELINES FOR RESIDENTIAL POOLS

IMPORTANT NOTES:

THIS DOCUMENT IS FOR ILLUSTRATIVE PURPOSES ONLY. THE DEALER OR CONTRACTOR WHO SELLS OR INSTALLS YOUR POOL IS AN INDEPENDENT CONTRACTOR AND IS NOT AN AGENT OF THE MANUFACTURER. THE CONSTRUCTION METHODS ILLUSTRATED HERE ARE SUGGESTIONS AND APPLY ONLY TO NORMAL GROUND CONDITIONS. THERE MAY BE ADDITIONAL PRECAUTIONS AND/OR METHODS OF CONSTRUCTION. PROPER INSTALLATION IS THE RESPONSIBILITY OF THE DEALER/BUILDER/CONTRACTOR.

ENGINEERING DRAWING NUMBER: 00016619

WEIGHT:	14797.359 lbs
VOLUME:	409589.603 Inch³
COLOR:	NA
HEAT TREAT:	NA
FINISH:	NA
TEXTURE:	NA

UNLESS OTHERWISE SPECIFIED
DIMENSIONS ARE IN INCHES
TOLERANCES
DECIMALS: X ± .1
XX ± .01
XXX ± .001
XXXX ± .0005
ANGULAR: X ± 0.5
THIRD ANGLE PROJECTION

DESIGNED BY:	BUMPHREY	CREATION DATE:	7/24/2017
DETAILED BY:	BUMPHREY	DETAILED DATE:	10/23/2017
LAST REVISED BY:	bumphrey	LAST REVISED DATE:	10/23/2017
MATERIAL:	Water		

PoolWarehouse
we know swimming pools

TITLE: LAYOUT, 8' X 10', RECTANGLE, 6" RADIUS, 3'-4" DEEP, FLAT BOTTOM, Q00000562, 600 SERIES

PART NUMBER: 00016619
SCALE: 1:24
SHEET: 2 OF 3
SIZE: A

MIRROR NUMBER:
MADE FROM: 00016618
CHECK IN DATETIME: Monday, October 23, 2017 9:56:32 AM

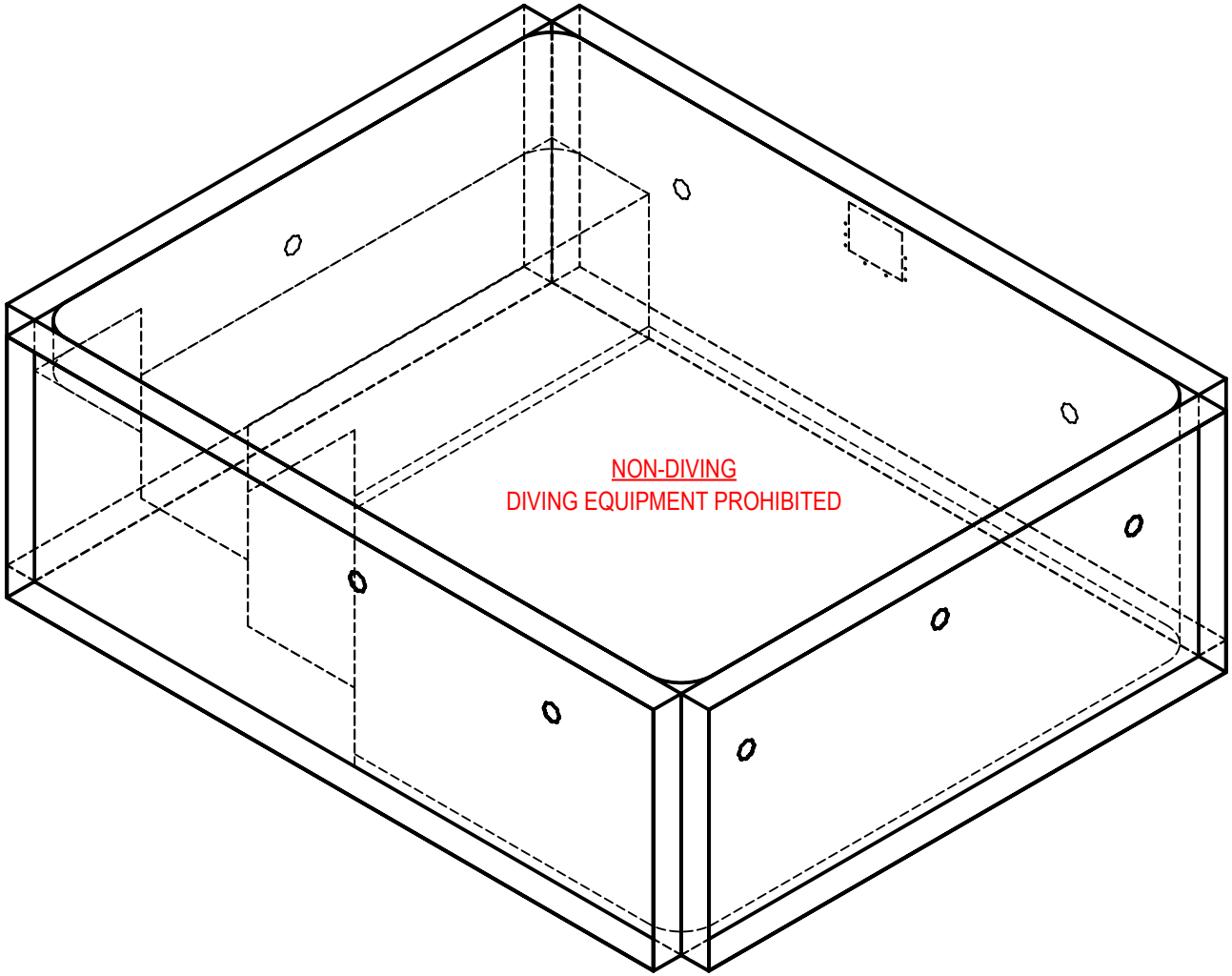

MIRROR NUMBER:

MADE FROM: 00016618

CHECK IN DATETIME: Monday, October 23, 2017 9:57:15 AM

ENGINEERING DRAWING NUMBER: 00016619

WEIGHT:	lbs
VOLUME:	Inch³
COLOR:	NA
HEAT TREAT:	NA
FINISH:	NA
TEXTURE:	NA

UNLESS OTHERWISE SPECIFIED

DIMENSIONS ARE IN INCHES
TOLERANCES
DECIMALS: X ± .1
XX ± .01
XXX ± .001
XXXX ± .0005

ANGULAR: X ± 0.5

THIRD ANGLE PROJECTION

DESIGNED BY:	BUMPHREY
CREATION DATE:	7/24/2017
DETAILED BY:	BUMPHREY
DETAILED DATE:	10/23/2017
LAST REVISED BY:	bumphrey
LAST REVISED DATE:	10/23/2017
MATERIAL:	

PoolWarehouse
we know swimming pools

TITLE: LAYOUT, 8' X 10', RECTANGLE, 6" RADIUS, 3'-4" DEEP, FLAT BOTTOM, Q00000562, 600 SERIES

PART NUMBER: 00016619

SCALE: 1:24

SHEET: 3 OF 3

SIZE: A