REVISION HISTORY				
REV.	DESCRIPTION	DATE	ECO	BY

MIRROR NUMBER:

MADE FROM: 00017110

CHECK IN DATE/TIME: Friday, January 05, 2018 1:16:39 PM

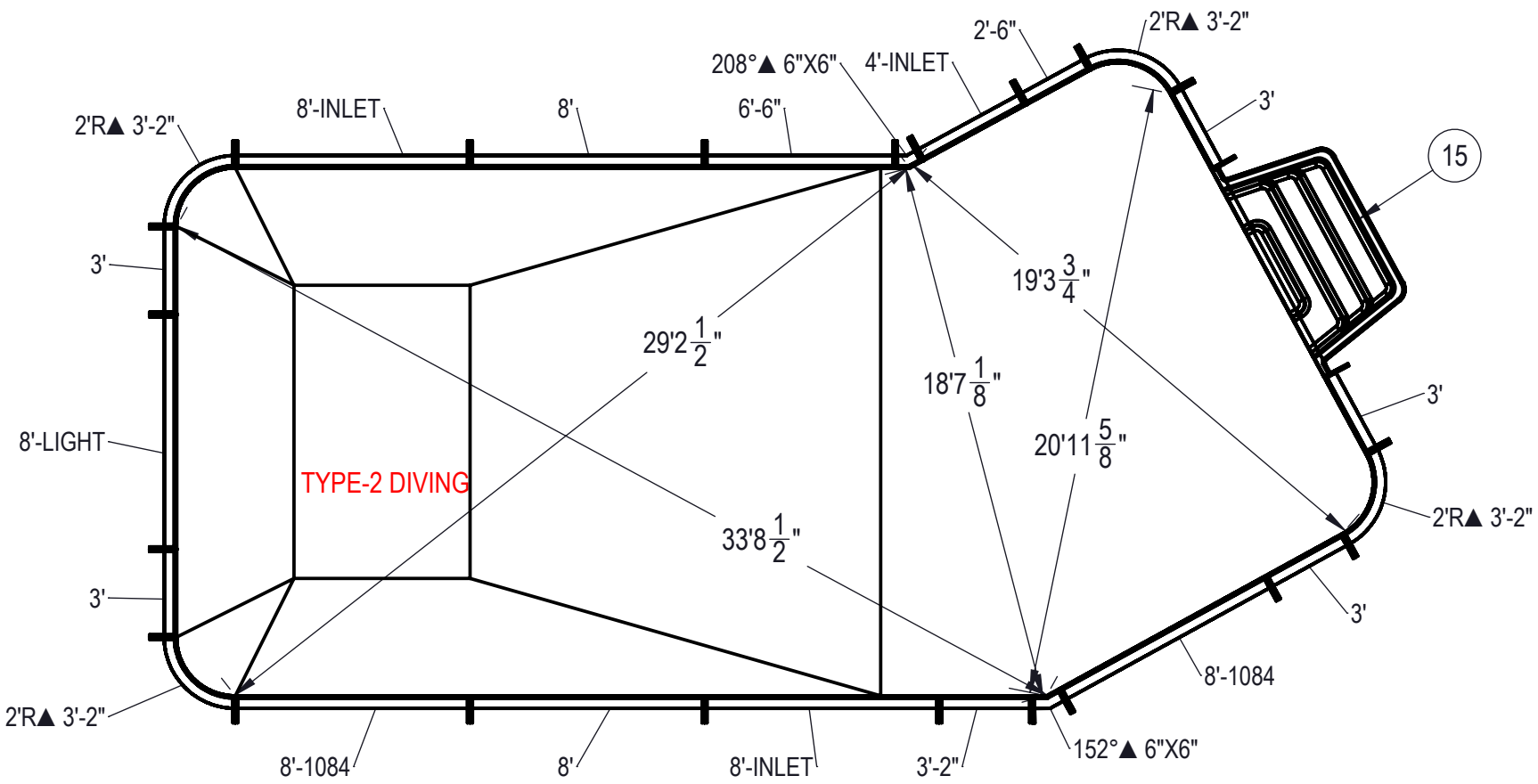

ITEM	FILE NAME	DESCRIPTION	CUSTOMER DRAWING #	VENDOR PART #	QTY.
1	BOLT, PACK	BOLT, FLANGE, 3/8-16 X 1", PACK (50)	HPS1916	HPS1916	6
2	SBRACE	BRACE, FOLD OVER WITH TURNBUCKLE, STEEL, HPSFOB	HPSFOB	HPSFOB	23
3	PANEL, ANGLE	PANEL, ANGLE, 6" X 6" X 152°, 600 SERIES	HPSDLL	00001675	1
4	PANEL, ANGLE	PANEL, ANGLE, 6" X 6" X 208°, 600 SERIES	HPSDLLR	00001673	1
5	PANEL, RADIUS	PANEL, 2' RADIUS, 3-2" LONG, 600 SERIES	HPSD2R	00000287	4
6	PANEL, STRAIGHT	PANEL, 2'-6" LONG, 600 SERIES	HPSD26P	00002021	1
7	PANEL, STRAIGHT	PANEL, 3' LONG, 600 SERIES	HPSD103P	00000643	5
8	PANEL, STRAIGHT	PANEL, 3'-2" LONG, 600 SERIES	HPSCS4P	00007503	1
9	PANEL, STRAIGHT	PANEL, 4' LONG, INLET, 600 SERIES	HPSE104I	00000281	1
10	PANEL, STRAIGHT	PANEL, 6'-6" LONG, 600 SERIES	HPSD1066P	00000678	1
11	PANEL, STRAIGHT	PANEL, 8' LONG, 1084, 600 SERIES	HPSD10884	00002006	2
12	PANEL, STRAIGHT	PANEL, 8' LONG, 600 SERIES	HPSD108P	00000687	2
13	PANEL, STRAIGHT	PANEL, 8' LONG, INLET, 600 SERIES	HPSD108I	00000699	2
14	PANEL, STRAIGHT	PANEL, 8' LONG, LIGHT, 600 SERIES	HPSD108L	00000701	1
15	HS110N	STEP, 8', TWIN SEAT, 4 TREAD	HS110N	HS110N	1

NOTES:

1. THESE ARE FINISHED DIMENSIONS READY FOR THE LINER.
2. DIMENSIONS ARE FROM INSIDE POOL PANELS.
3. ROPE AND FLOAT ASSEMBLY SHOULD BE INSTALLED IN ACCORDANCE WITH CURRENT ANSI/ASPS/ICC REGULATIONS
4. HYDRA LINER TRACK FOR STEPS IS INSTALLED WITH THE BARB FACING THE RISER WALL ON THE STEP.

EXCAVATION NOTES:

5. ROUGH EXCAVATION SHOULD BE 2" DEEPER IN EACH INSTANCE.
6. SOIL TO HAVE MINIMUM BEARING CAPACITY OF 1500 PSF.
7. LOCATE TOP OF POOL AT LEAST 6" ABOVE THE SURROUNDING LAND ELEVATION.
8. SEE "OVER DIG DETAIL" FOR EXCAVATION AROUND POOL.
9. FILL VOIDS UNDER BASE OF PANELS AND TAMP WELL.
10. BACK FILL WITH NON-EXPANSIVE MATERIAL.
11. FOLLOW ALL CURRENT ANSI / APSP / ICC GUIDELINES FOR RESIDENTIAL POOLS

IMPORTANT NOTES:

THIS DOCUMENT IS FOR ILLUSTRATIVE PURPOSES ONLY. THE DEALER OR CONTRACTOR WHO SELLS OR INSTALLS YOUR POOL IS AN INDEPENDENT CONTRACTOR AND IS NOT AN AGENT OF THE MANUFACTURER. THE CONSTRUCTION METHODS ILLUSTRATED HERE ARE SUGGESTIONS AND APPLY ONLY TO NORMAL GROUND CONDITIONS. THERE MAY BE ADDITIONAL PRECAUTIONS AND/OR METHODS OF CONSTRUCTION. PROPER INSTALLATION IS THE RESPONSIBILITY OF THE DEALER/BUILDER/CONTRACTOR.

ENGINEERING DRAWING NUMBER: 00017113

WEIGHT: lbs
VOLUME: Inch³
COLOR:
HEAT TREAT:
FINISH:
TEXTURE:

UNLESS OTHERWISE SPECIFIED
DIMENSIONS ARE IN INCHES
TOLERANCES
DECIMALS: X ± .1
XX ± .01
XXX ± .001
XXXX ± .0005
ANGULAR: X ± 0.5
THIRD ANGLE PROJECTION

DESIGNED BY:	CREATION DATE:
BUMPHREY	3/15/2013
DETAILED BY:	DETAILED DATE:
BUMPHREY	1/5/2018
LAST REVISED BY:	LAST REVISED DATE:
bumphrey	1/5/2018
MATERIAL:	

HYDRA POOLS

TITLE: LAYOUT, 18' X 40'9", LAZY L, RIGHT, 2' RADIUS, 8' DEEP, HS110N, LIGHT, 2-1084, 3-INLET, 600 SERIES

PART NUMBER: 00017113

SCALE: 1:192
SHEET: 1 OF 4
SIZE: A

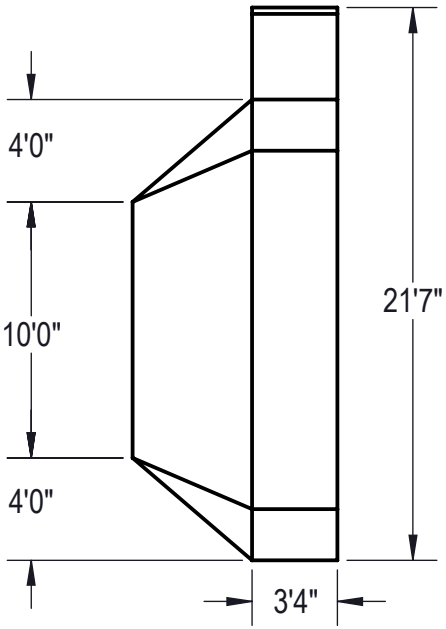

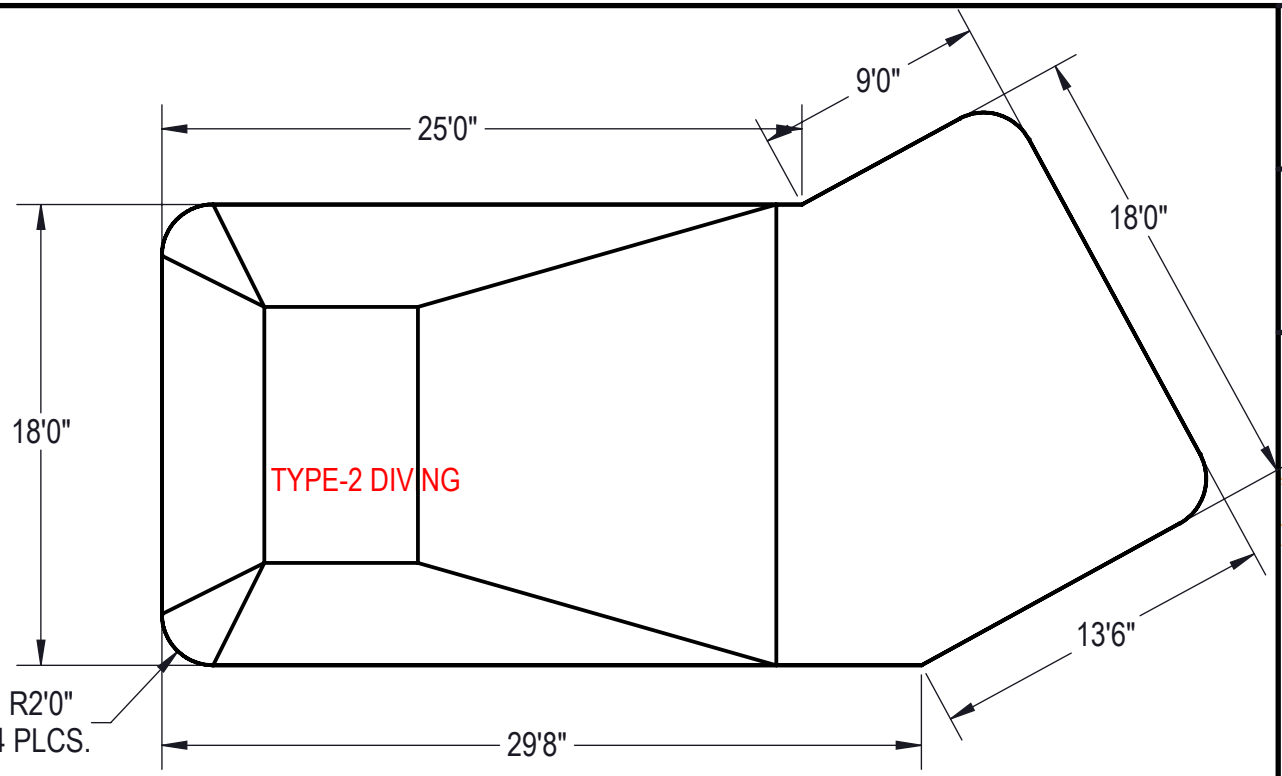

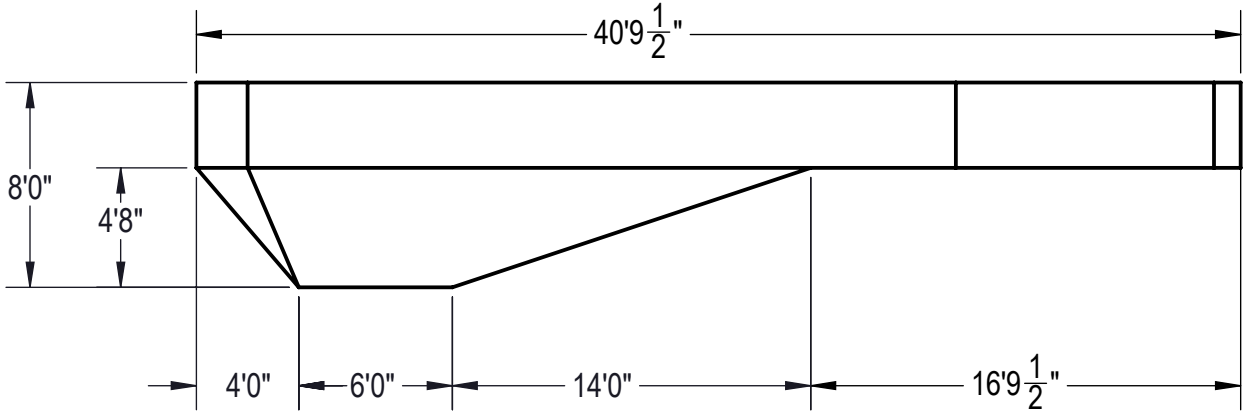

Area: 691.21ft ^2
Perimeter: 109.73ft
Volume = 24965 US gallons

NOTES:

1. THESE ARE FINISHED DIMENSIONS READY FOR THE LINER.
2. DIMENSIONS ARE FROM INSIDE POOL PANELS.
3. ROPE AND FLOAT ASSEMBLY SHOULD BE INSTALLED IN ACCORDANCE WITH CURRENT ANSI/ASPS/ICC REGULATIONS
4. HYDRA LINER TRACK FOR STEPS IS INSTALLED WITH THE BARB FACING THE RISER WALL ON THE STEP.

EXCAVATION NOTES:

5. ROUGH EXCAVATION SHOULD BE 2" DEEPER IN EACH INSTANCE.
6. SOIL TO HAVE MINIMUM BEARING CAPACITY OF 1500 PSF.
7. LOCATE TOP OF POOL AT LEAST 6" ABOVE THE SURROUNDING LAND ELEVATION.
8. SEE "OVER DIG DETAIL" FOR EXCAVATION AROUND POOL.
9. FILL VOIDS UNDER BASE OF PANELS AND TAMP WELL.
10. BACK FILL WITH NON-EXPANSIVE MATERIAL.
11. FOLLOW ALL CURRENT ANSI / APSP / ICC GUIDELINES FOR RESIDENTIAL POOLS

IMPORTANT NOTES:

THIS DOCUMENT IS FOR ILLUSTRATIVE PURPOSES ONLY. THE DEALER OR CONTRACTOR WHO SELLS OR INSTALLS YOUR POOL IS AN INDEPENDENT CONTRACTOR AND IS NOT AN AGENT OF THE MANUFACTURER. THE CONSTRUCTION METHODS ILLUSTRATED HERE ARE SUGGESTIONS AND APPLY ONLY TO NORMAL GROUND CONDITIONS. THERE MAY BE ADDITIONAL PRECAUTIONS AND/OR METHODS OF CONSTRUCTION. PROPER INSTALLATION IS THE RESPONSIBILITY OF THE DEALER/BUILDER/CONTRACTOR.

ENGINEERING DRAWING NUMBER: 00017113

WEIGHT:	lbs
VOLUME:	Inch³
COLOR:	NA
HEAT TREAT:	NA
FINISH:	NA
TEXTURE:	NA

UNLESS OTHERWISE SPECIFIED
DIMENSIONS ARE IN INCHES
TOLERANCES
DECIMALS: X ± .1
XX ± .01
XXX ± .001
XXXX ± .0005
ANGULAR: X ± 0.5
THIRD ANGLE PROJECTION

DESIGNED BY: BUMPHREY	CREATION DATE: 3/15/2013
DETAILED BY: BUMPHREY	DETAILED DATE: 1/5/2018
LAST REVISED BY: bumphrey	LAST REVISED DATE: 1/5/2018
MATERIAL:	

HYDRA POOLS

TITLE: LAYOUT, 18' X 40'9", LAZY L, RIGHT, 2' RADIUS, 8' DEEP, HS110N, LIGHT, 2-1084, 3-INLET, 600 SERIES

PART NUMBER: 00017113

SCALE: 1:128
SHEET: 2 OF 4
SIZE: A

MIRROR NUMBER:
MADE FROM: 00017110
CHECK IN DATE/TIME: Friday, January 05, 2018 1:14:29 PM

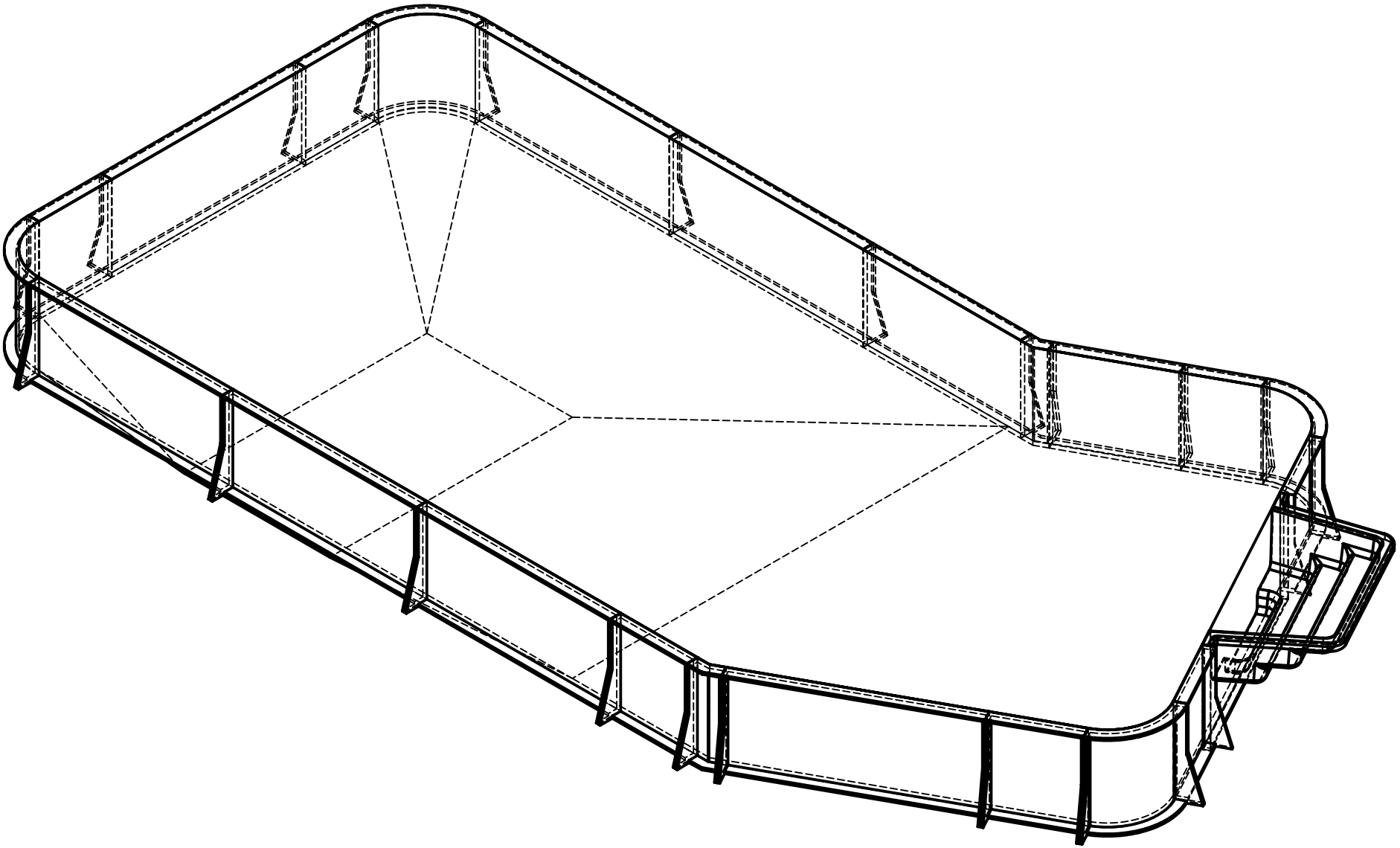

MIRROR NUMBER:

MADE FROM: 00017110

CHECK IN DATE/TIME: Friday, January 05, 2018 1:16:39 PM

ENGINEERING DRAWING NUMBER: 00017113

WEIGHT:	lbs
VOLUME:	Inch³
COLOR:	
HEAT TREAT:	
FINISH:	
TEXTURE:	

UNLESS OTHERWISE SPECIFIED

DIMENSIONS ARE IN INCHES
TOLERANCES
DECIMALS: X ± .1
XX ± .01
XXX ± .001
XXXX ± .0005

ANGULAR: X ± 0.5

THIRD ANGLE PROJECTION

DESIGNED BY:	BUMPHREY	CREATION DATE:	3/15/2013
DETAILED BY:	BUMPHREY	DETAILED DATE:	1/5/2018
LAST REVISED BY:	bumphrey	LAST REVISED DATE:	1/5/2018
MATERIAL:			

HYDRA POOLS

TITLE: LAYOUT, 18' X 40'9", LAZY L, RIGHT, 2' RADIUS, 8' DEEP, HS110N, LIGHT, 2-1084, 3-INLET, 600 SERIES

PART NUMBER: 00017113

SCALE: 1:128

SHEET: 3 OF 4

SIZE: A

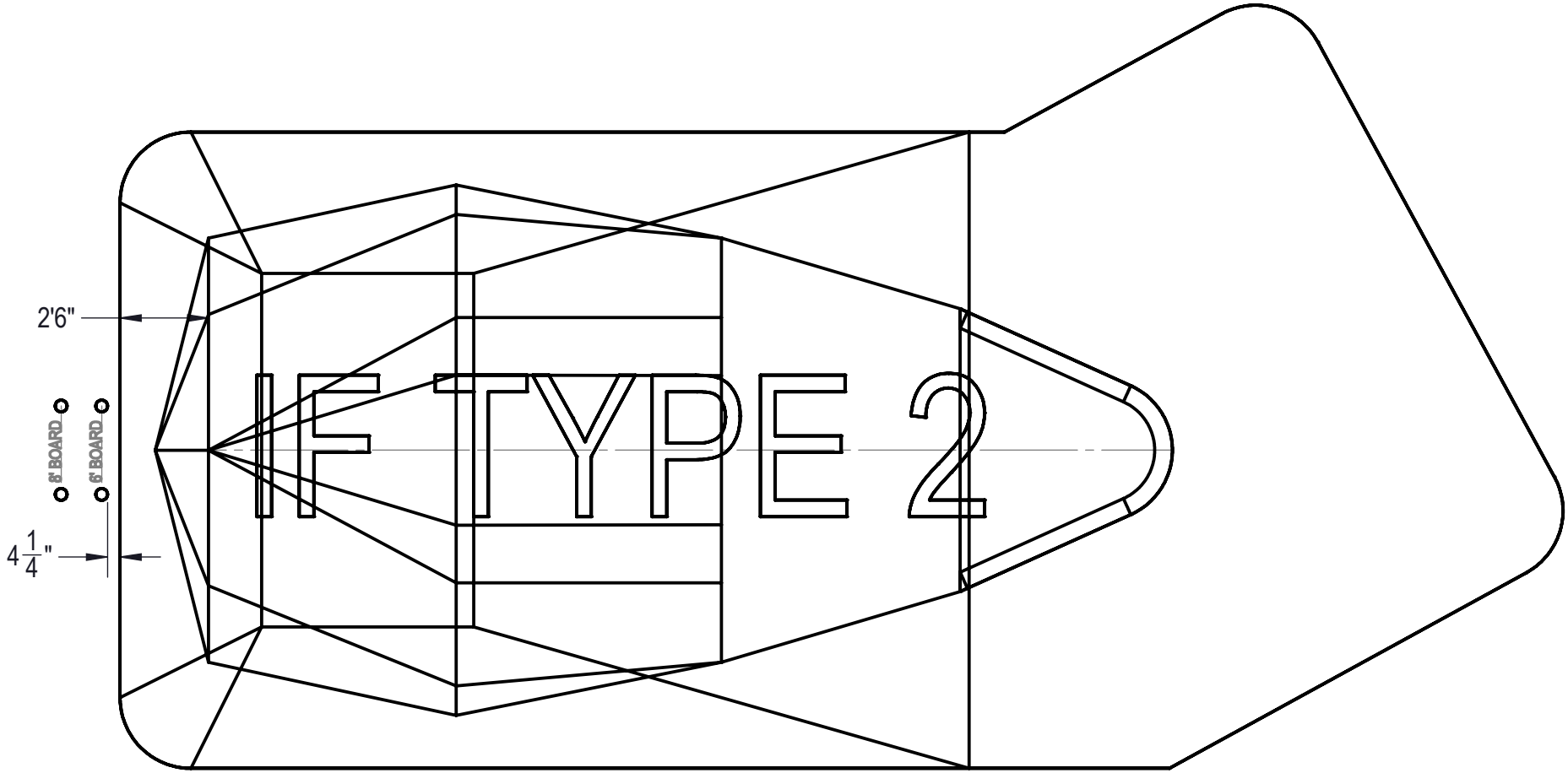

MIRROR NUMBER:

MADE FROM: 00017110

CHECK IN DATE/TIME: Friday, February 05, 2016 1:16:39 PM

ENGINEERING DRAWING NUMBER: 00017113

WEIGHT:	lbs
VOLUME:	Inch³
COLOR:	
HEAT TREAT:	
FINISH:	
TEXTURE:	

UNLESS OTHERWISE SPECIFIED

DIMENSIONS ARE IN INCHES
TOLERANCES
DECIMALS: X ± .1
XX ± .01
XXX ± .001
XXXX ± .0005

ANGULAR: X ± 0.5

THIRD ANGLE PROJECTION

DESIGNED BY:	BUMPHREY	CREATION DATE:	3/15/2013
DETAILED BY:	BUMPHREY	DETAILED DATE:	1/5/2018
LAST REVISED BY:	bumphrey	LAST REVISED DATE:	1/5/2018
MATERIAL:			

HYDRA POOLS

TITLE: LAYOUT, 18' X 40'9", LAZY L, RIGHT, 2' RADIUS, 8' DEEP, HS110N, LIGHT, 2-1084, 3-INLET, 600 SERIES

PART NUMBER: 00017113

SCALE: 1:128

SHEET: 4 OF 4

SIZE: A